C-9

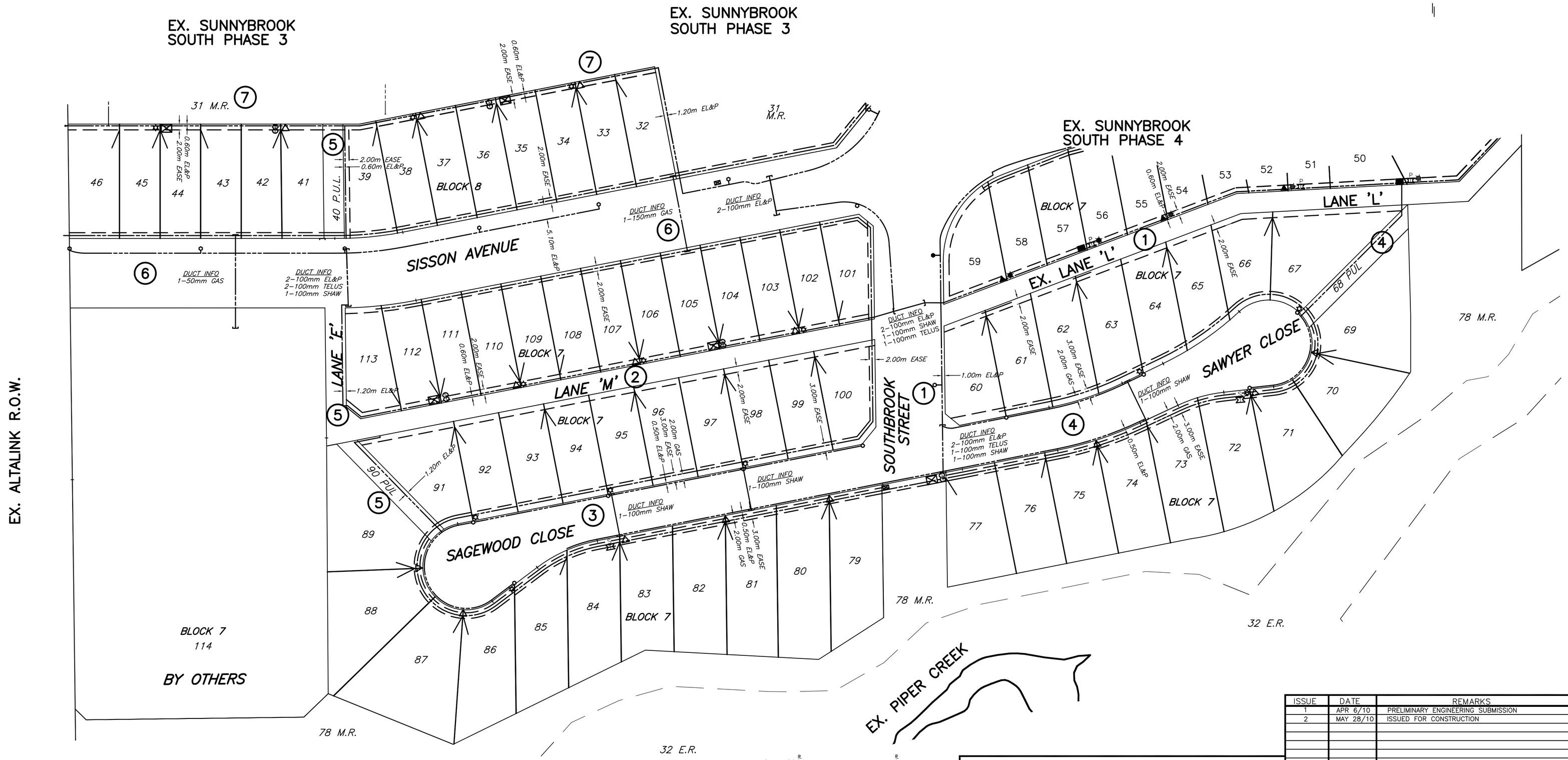

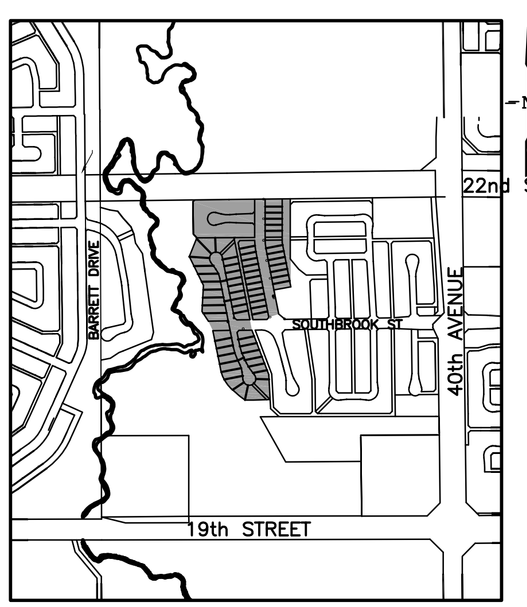

SITE LOCATION
SCALE
1:10,000

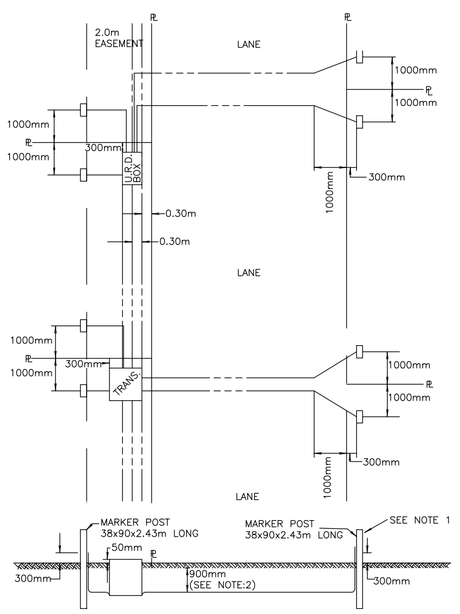

NOTES:

1.).....SECONDARY SERVICE CABLES TO BE CAPPED WITH HEAT SHRINKS AT MARKER POST.
2.).....900mm TRENCH DEPTH TO BE FROM ROUGH GRADE.

TYPICAL REAR LANE SERVICING
RESIDENTIAL

LEGEND:

EXISTING GAS LINE SHOWN THUS:
PROPOSED GAS LINE SHOWN THUS:
EXISTING E.L.&P, TELUS, & C.TV.SHOWN THUS:
PROPOSED E.L.&P., TELUS, & C.TV. SHOWN THUS:
EXISTING TELUS OR CABLE TV. ONLY SHOWN THUS:
PROPOSED TELUS OR CABLE TV. ONLY SHOWN THUS:
EXISTING STREET LIGHT ONLY SHOWN THUS.... ST. LT.
PROPOSED STREET LIGHT ONLY SHOWN THUS.... ST. LT.
EXISTING EASEMENT
PROPOSED EASEMENT
EXISTING LIGHT STANDARDS SHOWN THUS:
PROPOSED LIGHT STANDARDS SHOWN THUS:
EXISTING TRANSFORMER SHOWN THUS:
PROPOSED TRANSFORMER SHOWN THUS:
EXISTING URD. BOX SHOWN THUS:
PROPOSED URD. BOX SHOWN THUS:
EXISTING TELUS STRUCTURES SHOWN THUS:
PEDESTAL.... P
SERVICE BOX.... S
SERVICE VAULT.... V
PROPOSED TELUS STRUCTURES SHOWN THUS:
PEDESTAL.... P
SERVICE BOX.... S
SERVICE VAULT.... V
PROPOSED C.T.V. PEDESTAL SHOWN THUS:
EXISTING C.T.V. PEDESTAL SHOWN THUS:
PROFILE NUMBERS SHOWN THUS:.... 1
CONSTRUCTION BOUNDARY
SUPER MAIL BOX SHOWN THUS
TELUS & C.T.V. SHARED PEDESTAL
EXISTING TELUS & C.T.V. SHARED PEDESTAL

ISSUE	DATE	REMARKS	BY
1	APR 6/10	PRELIMINARY ENGINEERING SUBMISSION	FQ
2	MAY 28/10	ISSUED FOR CONSTRUCTION	FQ

AL-TERRA
ENGINEERING LTD.
EDMONTON RED DEER

DRAWN: JGH
DESIGN: FQ
APPROVED: WLT
ACAD: F:\PROJECTS\262-ORDMAN\ORD4B\30-DESIGN\ORD4B C-9.dwg
SCALE: A1 – 1:750 11"x17" – 1:1500

THE CITY OF RED DEER

JOB No.: 262-4B
SHEET No.: 10/26
DATE ORIGINAL DWN.: FEB 2010
DATE PRN.:

SUNNYBROOK SOUTH PHASE 4B
MELCOR DEVELOPMENTS LTD.

OVERALL SHALLOW UTILITIES

DRAWING: C-9

F:\PROJECTS\262 - ORDMAN\ORD5\30 - DESIGN\ORD4B C-9.dwg, 5/31/2010 1:30:17 PM, fquanmd, 1:1